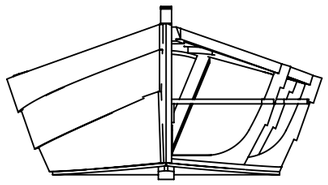

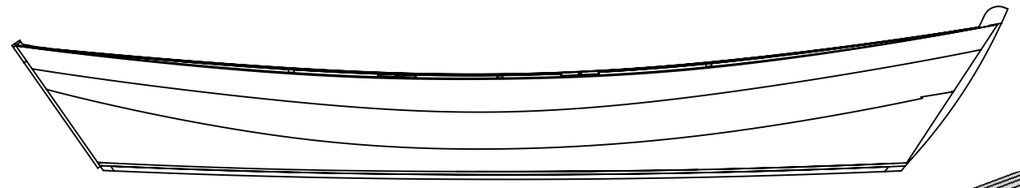

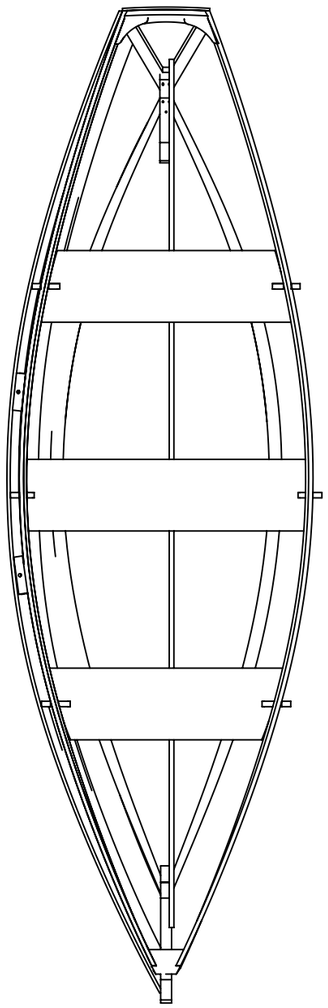

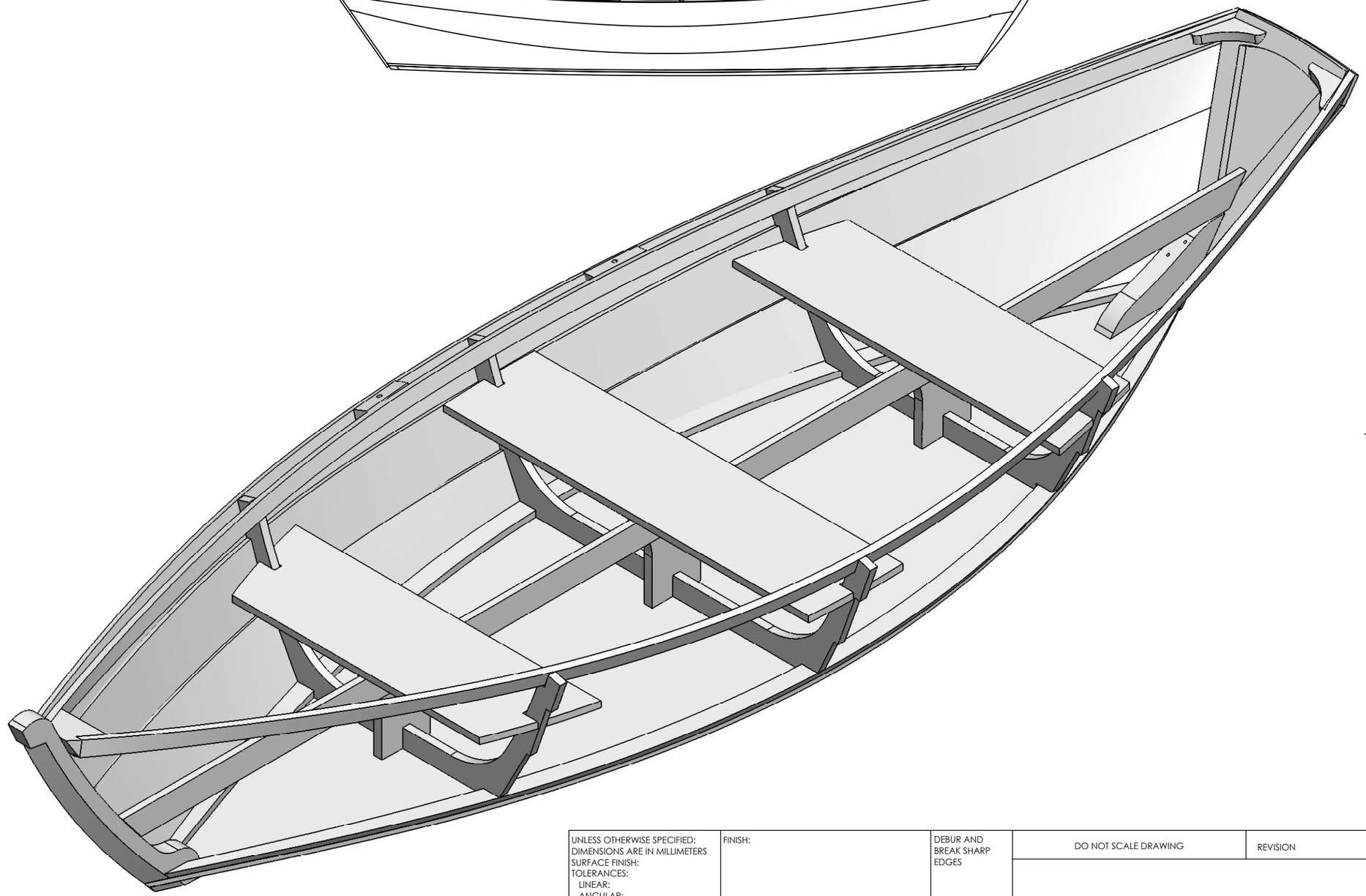

UNLESS OTHERWISE SPECIFIED: DIMENSIONS ARE IN MILLIMETERS SURFACE FINISH: TOLERANCES: LINEAR: ANGULAR:	FINISH:			DEBUR AND BREAK SHARP EDGES	DO NOT SCALE DRAWING	REVISION
	NAME	SIGNATURE	DATE		TITLE:	
DRAWN	CWBP				*Classic Rowing Dory*	
CHK'D						
APPV'D						
MFG						
Q.A				MATERIAL:	DWG NO.	A3
				WEIGHT:	SCALE:1:25	SHEET 1 OF 4

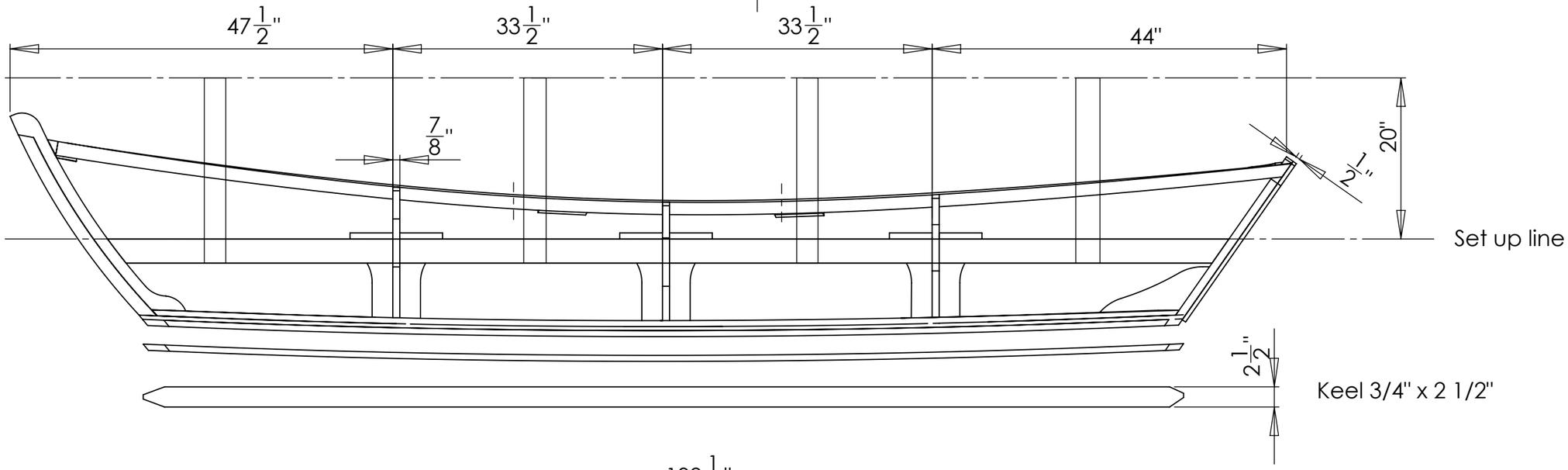

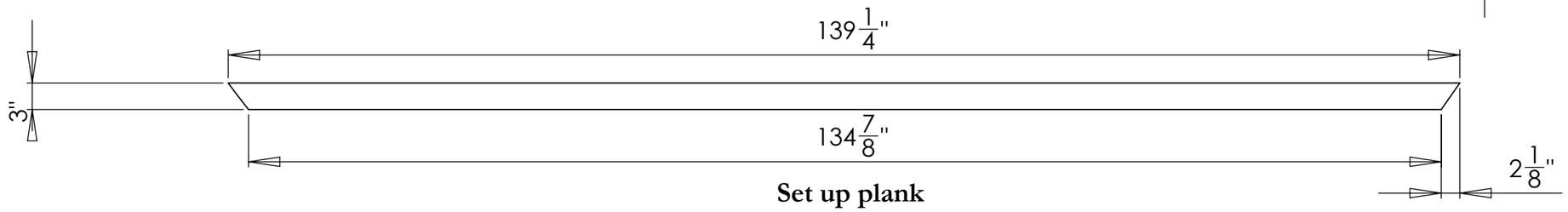

Set up plank

Setting Up
Using a 3 inch plank (3/4") cut ends as shown using the exact sizes provided.
Clamp the 3 seat supports uppermost to top of plank and set the spacing as shown.
The lower cut outs on the supports are suited to the frames and will set the frames to their correct height.

Screw in 4 vertical posts about 20" long and you can now lock these at ground level allowing you to work on the Dory upside sown.
Use the set up line on the Stem to locate to the set up plank, same for the Transom.
If you use 2 set up planks forward you can clamp the Stem between them. You will need to add about 3" to the forward length and ensure the set up marks are still visible.

The Transom has a set up line built into it, ensure this is flush to the set up planks.
The rocker in the hull is exactly 1" (crown height) from base of Transom to end of Stem.

At this point the chine and sheer clamps can be installed, sizes for these are marked on the frame plans, all frames must be faired to the clamps etc for maximum area contact.

From here see "Lap straking" sheet

UNLESS OTHERWISE SPECIFIED: DIMENSIONS ARE IN MILLIMETERS SURFACE FINISH: TOLERANCES: LINEAR: ANGULAR:	FINISH:			DEBUR AND BREAK SHARP EDGES	DO NOT SCALE DRAWING	REVISION
	NAME	SIGNATURE	DATE		TITLE:	
DRAWN						
CHK'D						
APPV'D						
MFG						
Q.A				MATERIAL:	DWG NO. Dory Assay	A3
				WEIGHT:	SCALE:1:15	SHEET 2 OF 4

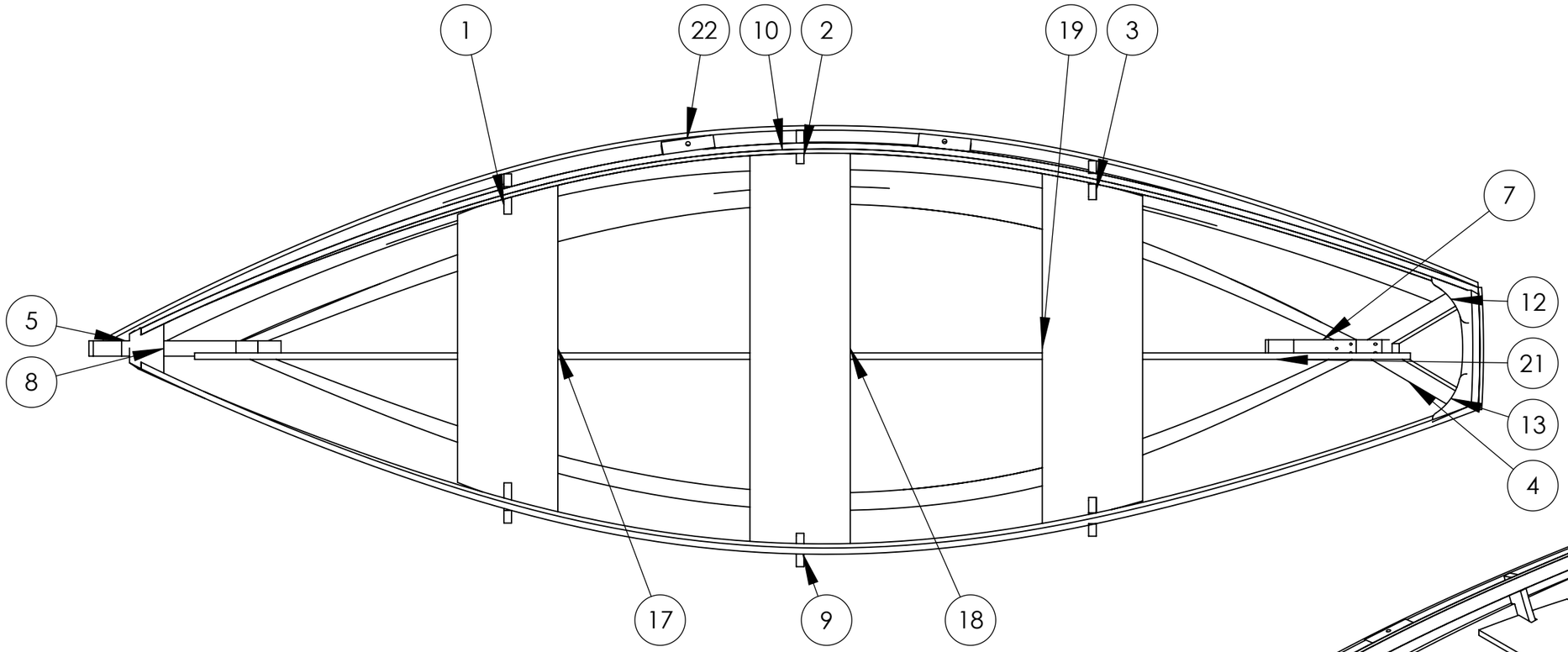

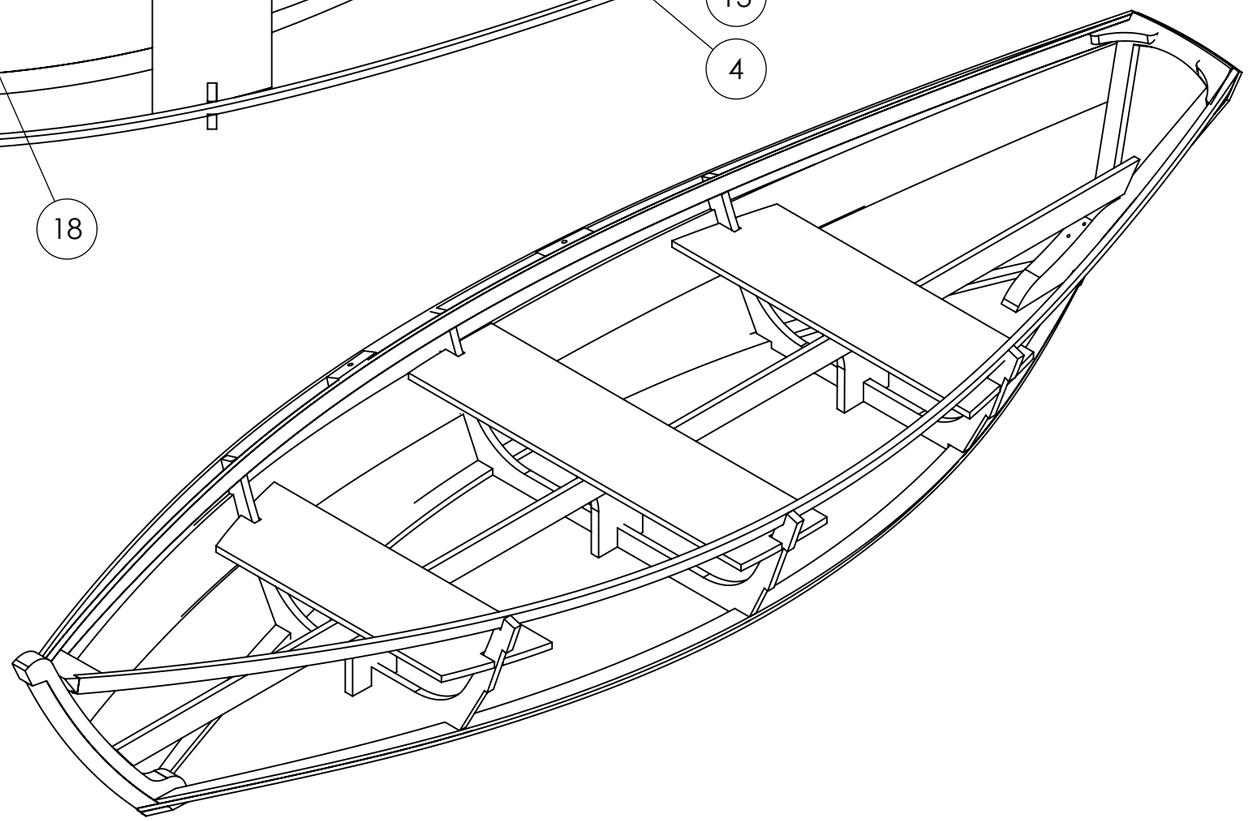

ITEM NO.	PART NUMBER	QTY.
1	Frame 1 D	1
2	Frame 2 D	1
3	Frame 3 D	1
4	Transom D	1
5	Stem D	1
6	Keel D	1
7	Stern Knee D	1
8	Breasthook D	1
9	Sheer D	1
10	MirrorSheer D	2
11	Floor Dory	1
12	Transom block D	1
13	MirrorTransom block D	1
14	Forw'd seat support D	1
15	Centre seat support D	1
16	Rear seat support D	1
17	Fow'd seat D	1
18	Centre seat D	1
19	Rear seat D	1
20	Transom outer D	1
21	Set- up plank Dory	2
22	Oarlock D	2

UNLESS OTHERWISE SPECIFIED:
DIMENSIONS ARE IN MILLIMETERS
SURFACE FINISH:
TOLERANCES:
LINEAR:
ANGULAR:

FINISH:

DEBUR AND BREAK SHARP EDGES

DO NOT SCALE DRAWING

REVISION

	NAME	SIGNATURE	DATE
DRAWN			
CHK'D			
APPV'D			
MFG			
Q.A			

MATERIAL:

WEIGHT:

TITLE:

DWG NO. Dory Assay

A3

SCALE:1:15

SHEET 3 OF 4

Lap Straking - Dory 13 foot

When the Stem, Transom and Stern knee are located correctly to the set up planks and plans the floor can now be attached. Permanently fix to frames and seat supports but only temporarily to Stern knee and Stem.
This is done so that when complete, an exterior keelson is added to the underside of the floor. This is used to fix the Stem etc permanently.
The floor outline must follow the chine and be trimmed allowing the lower strake to follow the rocker in the floor.

The lower strake will therefore extend past the chine by 1/2".
Using a 1/2" ply board, take the straight edge and temporarily fix to the strake step on all 3 frames. Frames 1 and 3 must be true so if Frame 2 does not align fix only 1 and 3. For frame 2 mark the step from the inside. Temporarily fix this now and using the outside face of the floor mark a line on the lower inner face of the strake.

Remove from the boat and lay flat. Use a long limber length of timber now to form a curve from Frame 1 step, passing through Frame 2 and 3.
This forms the first (lower) strake and all subsequent strakes are formed in a similar way. Ensure strakes extend just past stem and transom for now.

The middle strake can now be temporarily fixed BUT allowing an overlap of 1 1/4". Pre mark the lower strake with a line to aid in alignment for overhang and the proceed to rough out the strake. Middle and upper strakes are 9/16" thick.

Strakes at Stem and Transom are butted flush to each other ***see below***

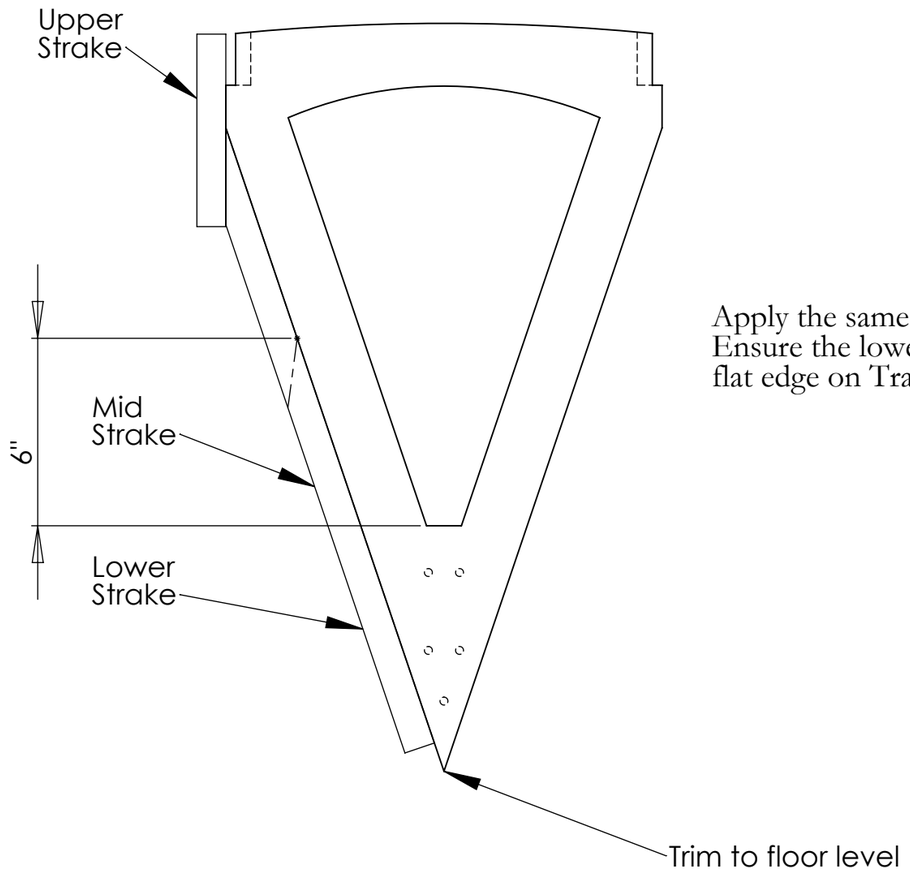

Apply the same flush joins to Strakes at Stem.
Ensure the lower Strake ends 6" above the flat edge on Transom.

Oarlocks
There are two postions shown for oarlocks but little detail other than the blocks must be fitted within the sheer clamp and top strake.
The block sizes provide will neen to be faired in.

Mark the outside of the strake with the oarlock centre to allow findingthis postion
once a sheer cap is placed over the sheer clamp and upper strake.

UNLESS OTHERWISE SPECIFIED: DIMENSIONS ARE IN MILLIMETERS SURFACE FINISH: TOLERANCES: LINEAR: ANGULAR:	FINISH:			DEBUR AND BREAK SHARP EDGES	DO NOT SCALE DRAWING	REVISION
	NAME	SIGNATURE	DATE		TITLE:	
DRAWN						
CHK'D						
APPV'D						
MFG						
Q.A				MATERIAL:	DWG NO. Dory Assay	A3
				WEIGHT:	SCALE:1:15	SHEET 4 OF 4